Name: .....ADM No:. ..... Class .....

232/2
PHYSICS
PAPER 2
(THEORY)
TIME: 2 HOURS
JAN 2021

SCHEME

MARANDA HIGH SCHOOL POST MOCK I 2021

Kenya Certificate of Secondary Education (K.C.S.E)

INSTRUCTIONS TO CANDIDATES: -

- Write your **name** and **admission number** in the spaces provided above.
- This paper consists of **two** sections; **A** and **B**
- Answer **all** the questions in section A and B in the spaces provided
- All working **must** be clearly shown.
- Mathematical tables and electronic calculators may be used.

(Take Speed of light, c = 3.0 x 10^8 m/s; Planck's constant, h = 6.63 x 10^{-34} Js)

For Examiners' Use Only:

SECTION	QUESTIONS	MAXIMUM SCORE	CANDIDATE'S SCORE
A	1-15	25	
B	16	11	
	17	12	
	18	11	
	19	12	
	20	09	
	TOTAL	**80**	

This paper consists of 13 printed pages. Candidates should check to ascertain that all pages are printed as indicated and that no questions are missing

SECTION A (25 MARKS)

1. Explain why sharp shadows support the theory that light travels in straight lines. (1 mark)

Sharp shadow is formed by blocking light traveling in a straight line.√

2. a) Give one reason why radioactive disintegration is different from ordinary chemical changes? (1 mark)

Chemical reaction involves electrons while radio activity involves nuclear reaction ie neutron and proton. Or In chemical reaction no new element is formed while in radioactivity new element is formed.√

3. The figure below shows part of a circuit containing three capacitors of 4μF, and 5μF and 6μF respectively.

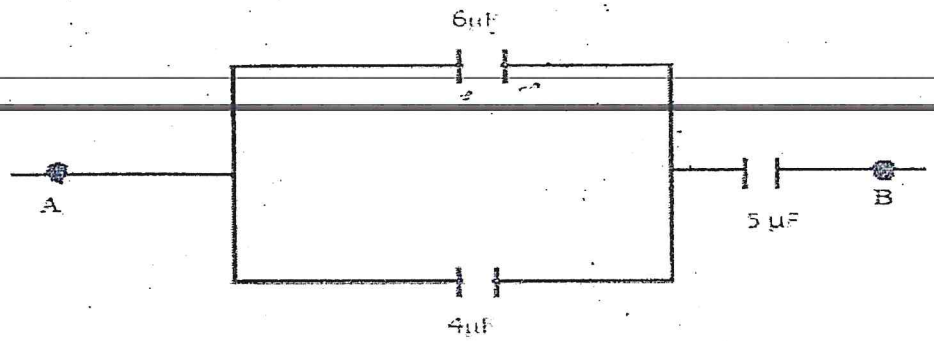

Determine the p.d across the 5μF capacitor given that the total charge stored in the capacitors is 0.0000052 C. (2 marks)

$$V = \frac{Q}{C} = \frac{0.0000052}{0.000005} = 1.04V$$

4. State one causes of power loss in long distance transmission wires and how these loses can be minimized (1mk)

High resistance in the wire, this can be minimized by use of thick copper or aluminum wires.√

5. State the meaning of the term "threshold frequency" as used in photoelectric emission.
.....(1mark)

This is the minimum frequency needed by a radiation to dislodge an electron from a given surface.√

6. The figure below shows the path of light passing through a rectangular block of perpex, placed in air.

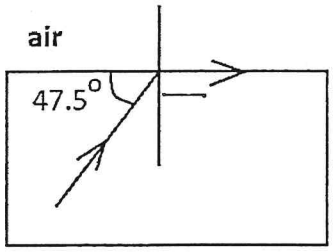

Calculate the refractive index of the Perspex. (2 marks)

$$C = 42.5^0 \ , n = \frac{1}{c} = \frac{1}{sin42.5} = 1.48$$

7. Two similar razor blades are placed one on a wooden block and the other on a soft iron block as shown in the figure below

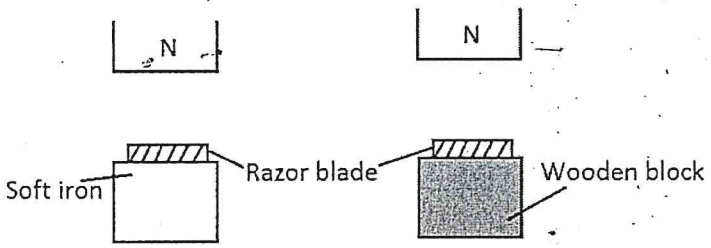

It was observed that the razor blade on the wooden block was attracted to the magnet while the other on the soft iron block was not. Explain. (2 marks)

Soft iron being a magnetic material√ is induced with magnetic properties thus become magnetic which holds/ attract√ the razor blade. Unlike wood which is not.

9. Figure below shows two parallel current carrying conductors **P** and **Q** placed close to one another. Current flows in the opposite directions.

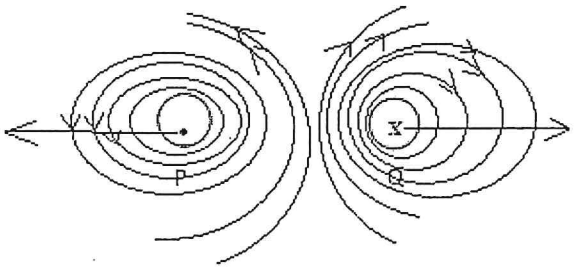

Sketch on the figure the magnetic field pattern formed by the two conductors. (1mk)

10. The table in **figure** below shows part of the electromagnetic spectrum in order of decreasing wavelength

A **RADIOWAVES**	B **MICROWAVES**	INFRA RED RADIATION	VISIBLE LIGHT	C **U.V**	D **X-RAYS**

(a) How are waves **C** produced? (1mk)

Produced by the sun

(b) State one use of the wave **D** (1mk)

- **Used in medicine**
- **Industries**
- **In crystallography**

11. A house has a lighting circuit operated from a **240V** mains supply. Four bulbs rated **40W 240V** and six bulbs rated **100W 240V**are switched on for **5** hoursa day. Determine the monthly bill for the consumer given that the cost of electricity is at shs. 5.50 per unit.

(*Take* 1 *month* = 30 *days and the standing charge is sh.* 150) (2mks)

(4 x 40)+ (100 x 6) =1600 + 600 = 2200W

$\frac{760}{1000}$ **x 5 = 3.8Kw h. daily**

In one month =3.8 x 30 = 114kWh.√

Amount in ksh = 150 + 114 x 5.50 = ksh 777√

Figure below shows an eye defect Use a ray diagram to show how the defect above could be corrected.(2mks)

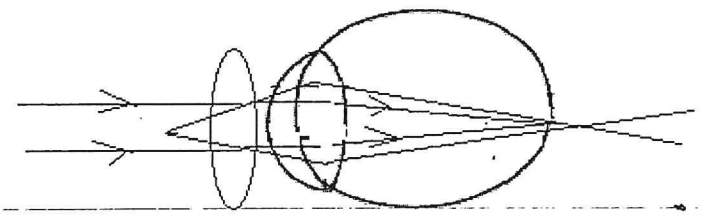

12. A girl standing at a distance claps her hands and hears an echo from a tall building 2 seconds later.

If the speed of sound in air is 340m/s, determine how far the building is. (2mks)

S = 2/2 x340 = 340 m

13. A current-carrying conductor **AB** is in a magnetic field as shown in the figure **below**.

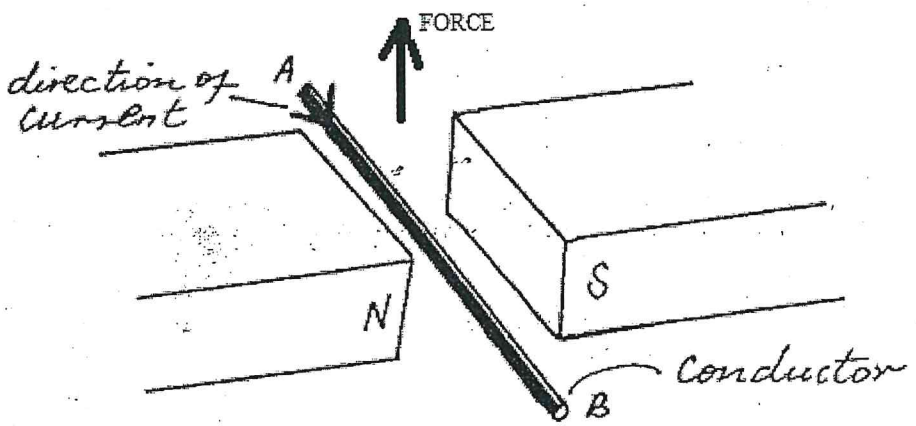

(a) Indicate the direction of force F acting on the conductor. (1mk)

(b) State **two** factors that determine the direction of the force F. (2mks)

- **Direction of the magnetic field**√
- **Direction of the current**√

15. The Figure below shows a wave form of voltage displayed on the screen of a C.R.O.

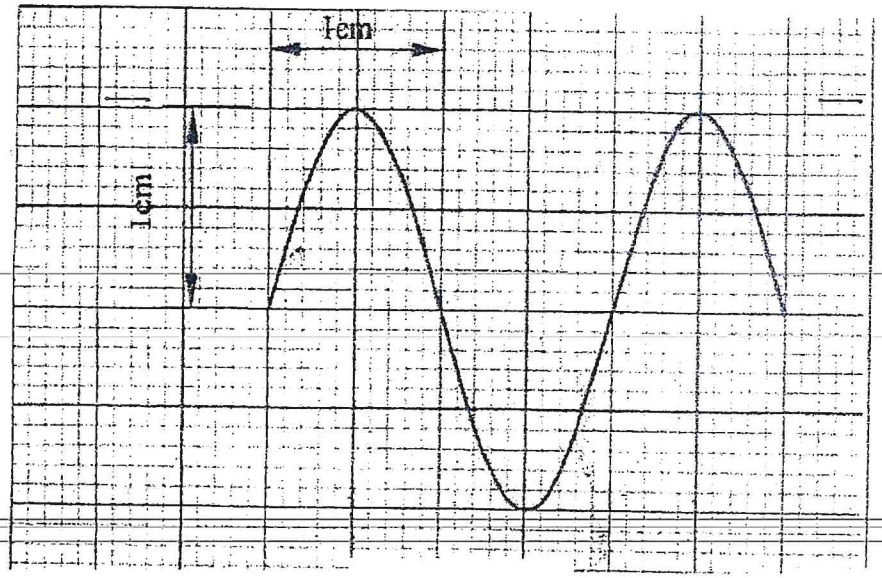

If the Y- Gain calibration is 7.5V per cm and the time base is 2.0 ms per cm.

Determine

I The peak to peak voltage of the input signal. (2 mks)

V = 7.5 x 1
= 7.5V

II The frequency of the signal. (1 mks)

2.0 ms = 0.002s
T → 2cm

T = 2 x 0.002
= 0.004S

$$f = \frac{1}{T} = \frac{1}{0.004s} = 250Hz$$

SECTION B (55 marks)

Answer all questions in the spaces provided

16 a) List two sources of back ground radiation in Radioactivity (2mks)

- **Cosmic rays from outer space**
- **Radiation from the sun**
- **Natural and artificial radio isotopes**
- **Some rocks**

b) A radioactive isotope $^{232}_{90}T$ emits two alpha particles and two beta particles as a result of four successive disintegration. If the daughter product is represented as $^{A}_{Z}Y$. Work out the values of A and Z. (2 marks)

$$^{232}_{90}T \xrightarrow{2\beta} {}^{232}_{92}A \xrightarrow{2\alpha} {}^{224}_{88}Y$$

A = 224
Z = 88

c) A certain radioactive material has the average count rate of 82 counts per second. After a time of 210 seconds, the count rate had dropped to 19 counts per second. The average background count rate remained constant at 10 counts per second. What is the half- life of the material
.....(3mks)

subtract average background from both initial and final count rate.
Initial 82 – 10 = 72
Final 19 – 10 = 9

$$72 \xrightarrow{1} 36 \xrightarrow{2} 18 \xrightarrow{3} 9$$

Number of half- life is 3.

Thus half lfe period $= \frac{210}{3} =$ **70 seconds**

d). Differentiate between nuclear fusion and nuclear fission as used in radioactivity (2mks)

Nuclear fusion is the fusing/combination of nuclei to form heavier nucleus while nuclear fission is the splitting of nucleus into nuclei.

e). State any two properties of beta particles (2mrks)

- **They are streams of electrons**

- **They negatively charged**
- **Can be absorbed by aluminum**
- **Greatly deflected by electric and magnetic field.**

17. (a) Define the term electromagnetic induction (1 mark)

This is the induction of current in an electric conductor due to change in magnetic field/flux

(b) State **two** factors that determine magnitude of e.m.f induced in a coil. (2mrks)

- **The speed of rotation of the coil**
- **Number of turns in the coil**
- **The strength of the magnetic field**

(c) State Lenz's a law of electromagnetic induction. (1mark)

It states that the direction of the induced e.m.f is such that the induced current which it causes to flow produces a magnetic effect that opposes the change producing it.

(d) The figure below shows a bar magnet being moved into a coil of insulated copper wire connected to a centre-zero galvanometer.

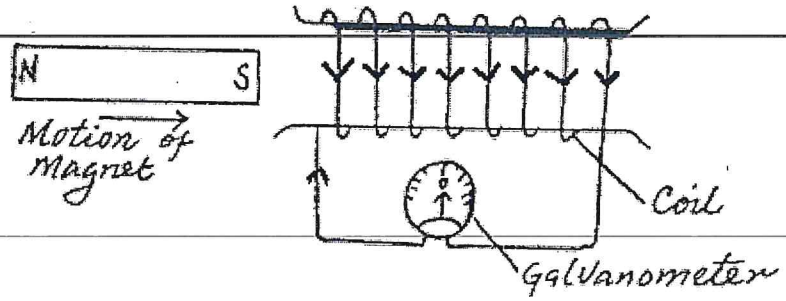

(i)Show on the diagram the direction of induced current in the coil. (1mark)

(ii)State and explain clearly what is observed on the galvanometer when the S-pole of the magnet is moved into and then withdrawn from the coil. (2marks)

The galvanometer deflects to the left then right. The direction of the induced current produces an electromagnet that opposes the motion of the magnet.

(e)A transformer has 1000 turns in the primary and 50 turns in the secondary winding.

The alternating e.m.f connected to the primary is 240V and the current is 0.5A.Thetransformer is 100% efficient.

(i)Determine the:

(I) secondary e.m.f (2marks)

$$\frac{NS}{NP} = \frac{VS}{VP}$$

$$\frac{50}{1000} = \frac{VS}{240}$$

$$V_S = \frac{240\ X\ 50}{1000} = 12\ V$$

(II)current in the secondary winding. (2marks)

$$\frac{NS}{NP} = \frac{IP}{IS}\ ,\quad \frac{50}{1000} = \frac{0.5}{IS}$$

$$I_S = \frac{1000x\ 0.5}{50} = 10A$$

(f) The figure below shows a simple d.c generator

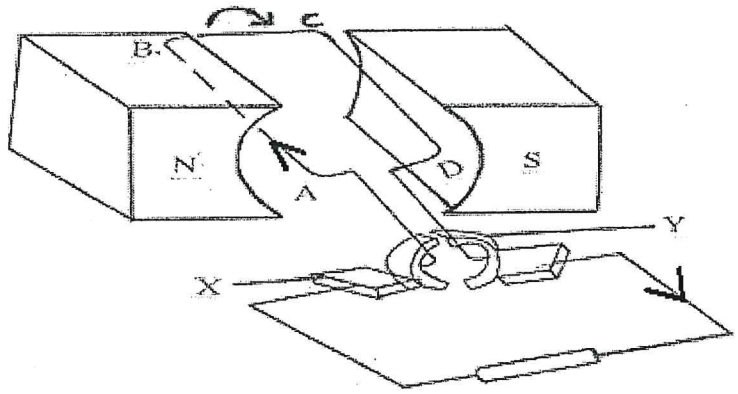

The coil is rotated in a clockwise direction; indicate using an arrow on the figure the direction of the induced current as the coil passes the position shown. (1mark)

18. a)i) What is the meaning of the term Photo-electric effect. (1mk)

Photoelectric effect is the emission of electrons from the surface of a solid when illuminated with electromagnetic radiation of sufficient frequency.

ii) The minimum frequency of light which will cause Photoelectric emission from a metal surface is 5.6×10^{14} Hz. If the metal surfaces irradiated with electromagnetic waves source of frequency is (6.8×10^{14}Hz). Determine.

I The work function of the metal surface ($h = 6.63 \times 10^{-34}$ JS) (1mk)

$W_0 = hf_0 = 6.63 \times 10^{-34} \times 5.6 \times 10^{14}$

$= 3.713 \times 10^{-19}$ J

II The energy of the source radiation. (2mks)

$E = hf = 6.63 \times 10^{-34} \times 6.8 \times 10^{14}$

$= 4.508 \times 10^{-19}$ J

III The maximum kinetic energy of the Photoelectrons produced in eV. (2mk)

$K.E = 4.508 \times 10^{-19} - 3.713 \times 10^{-19} = 0.795 \times 10^{-19}$ J

$$\text{In eV,} \quad = \frac{0.795 \times 10-19}{1.6 \times 10-19} = 0.4969 \text{ eV}$$

b).The figure below shows the variation of photoelectric current with applied voltage when two different surfaces a and b are illuminated with light a certain frequency. Use the information in the figure to answer the questions below.

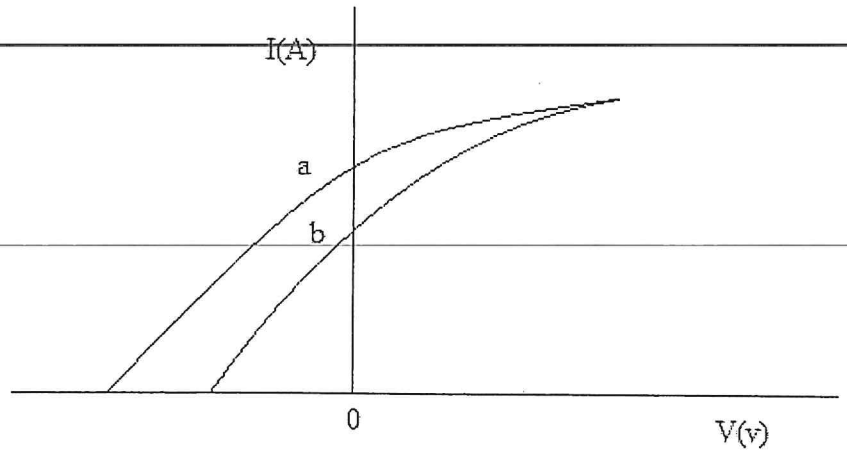

i) State and explain between surface *a* and *b* which one has a higher work function. (3mrks)

***b* has a higher work function because from the graph *b* requires less stopping potential as compared to *a* showing that in *b* there is less kinetic energy left than in *a*.**

ii) on the space provided sketch the graph of photoelectric current against applied voltage when light of two different intensity but same frequency is used to illuminate a given surface. (2mrks)

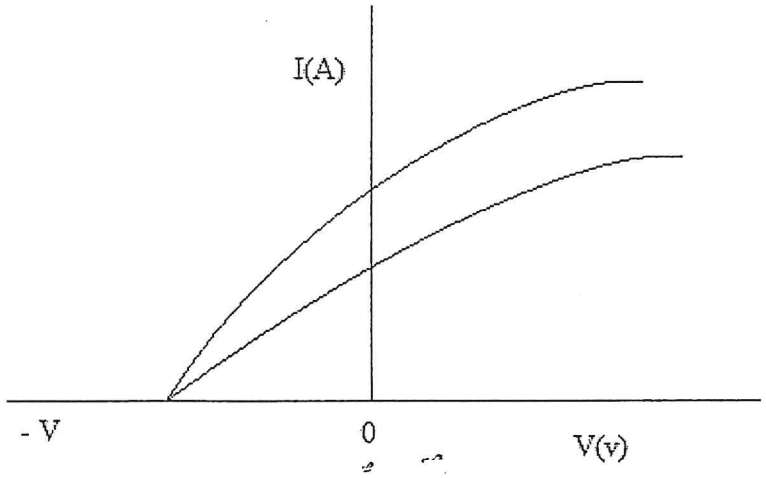

19. (a) State the Ohm's law (1mark)

The current flowing through a conductor is directly proportional to the potential difference across it provided the temperature and other physical conditions are kept constant.

(b) You are provided with the following apparatus; a coil of nichrome wire, two dry cells, ammeter, voltmeter, connecting wires, switch and rheostat.

(i) Draw a circuit diagram that can be used to verify Ohm's law (1mark)

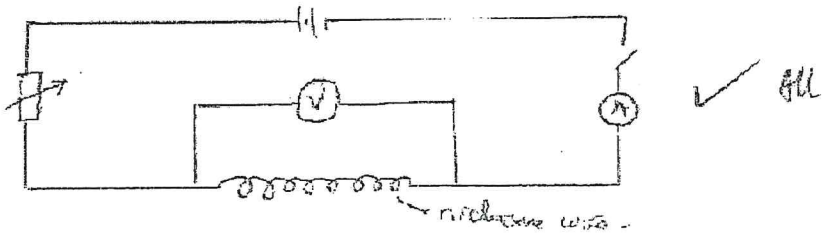

ii) Describe how the measurements obtained can be used to verify Ohm's law (3marks)

Set the apparatus as shown above

- **Vary the rheostat and record the corresponding values of voltages and current.**
- **Plot a graph of voltages against current.**
- **The graph should be a straight line passing through the origin.**

In conclusion the current is directly proportional to the potential difference.

(c) Study the figure below and answer the questions that follow

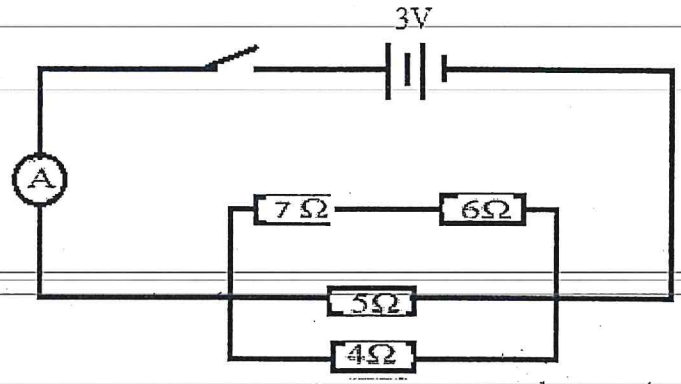

Determine:

(i) The combined resistance (3 marks)

$$\frac{1}{RT} = \frac{1}{13} + \frac{1}{5} + \frac{1}{4} = \frac{137}{260}$$

$$R_T = \frac{260}{137} = 1.898\ \Omega$$

(ii) The total current flowing through the 6Ω resistor (2 marks)

$$I = \frac{3}{13} = 0.23A$$

(iii) Voltage across the 7Ω resistor (2marks)

$$V = IR = 0.23 \times 7 = 1.61V$$

20. a)Using a diagram explain how doping produces a p-type semi-conductor. (3 marks)

To produce a p type semiconductor, a group 4 element such as germanium or silicon is doped using trivalent atom i.e group 3 element. The three electrons are used for bonding leaving a hole uncovered.

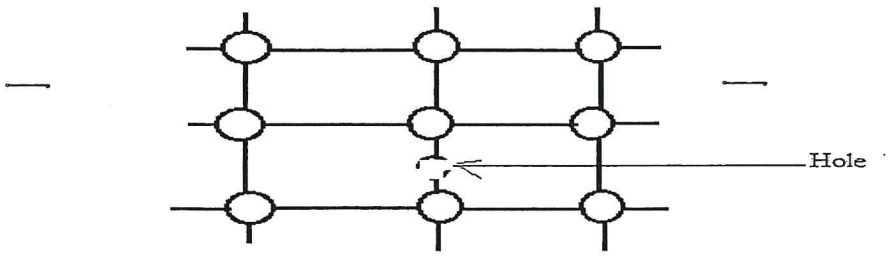

(ii) What is biasing? (1 mrk)

Biasing is the application of potential difference across a p-n junction

(iii) The diagram below shows a circuit with a p-n junction and a very low power bulb.

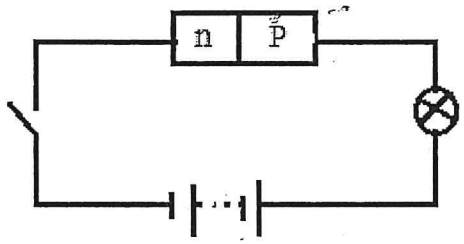

State with reason the observations made on the bulb when the switch is closed. 2 mrks)

When the switch is closed the bulb will light√ because the p-n junction is forward √ biased.

b) i) what is rectification. (1mrk)

This is the conversion of an alternating voltage (a.c) to a direct voltage (d.c)

ii) In the space provided below draw a complete circuit to show half wave rectification.

(2mrks)

